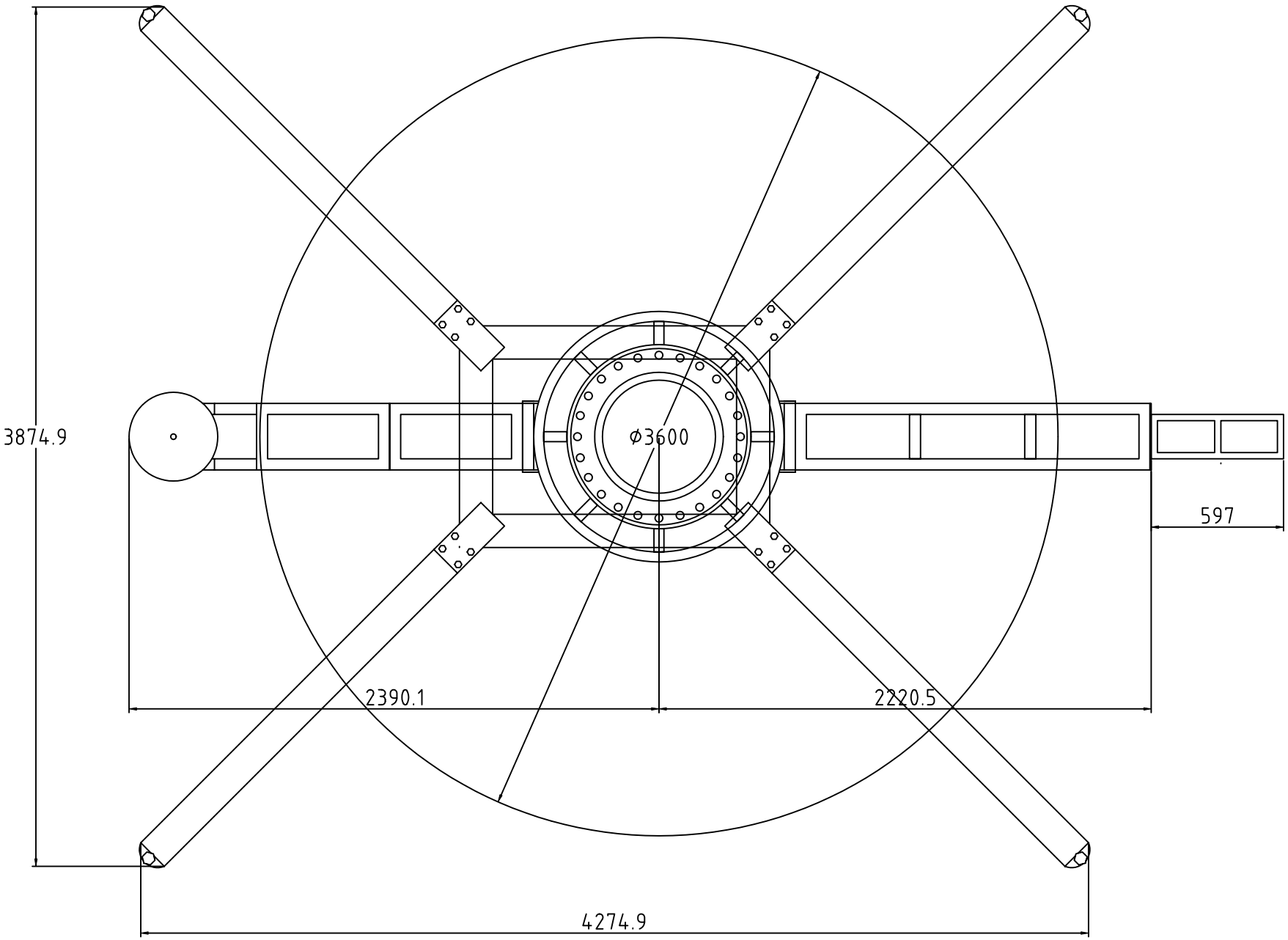
3874.9
ϕ3600
597
2390.1
2220.5
4274.9